O1 and O2 form a unity gain push−pull balanced amplifier for load Rl

O3 is a chopper stabalized integrator, (DC servo loop,) that holds the DC voltage across load Rl to a few micro Volts

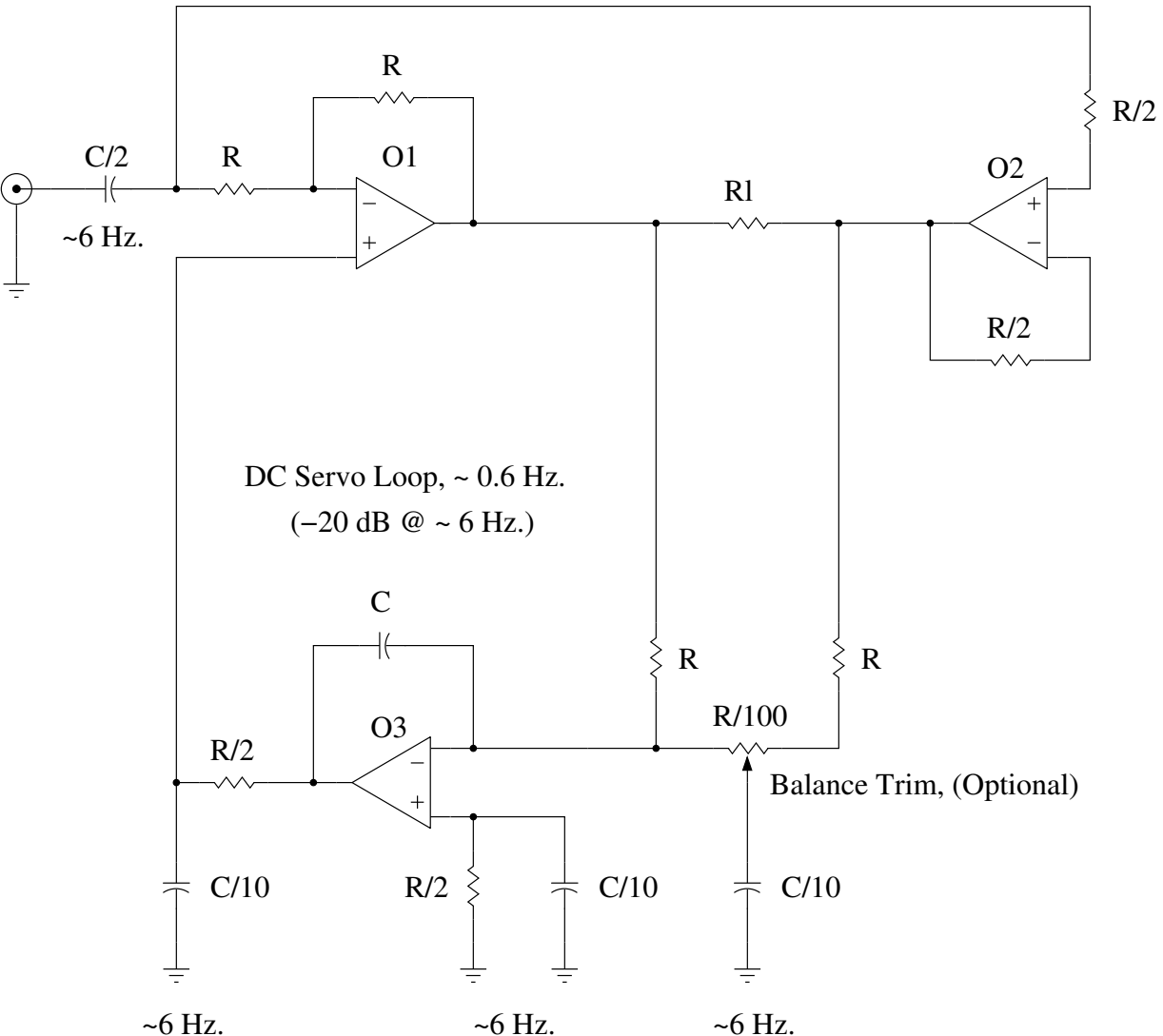

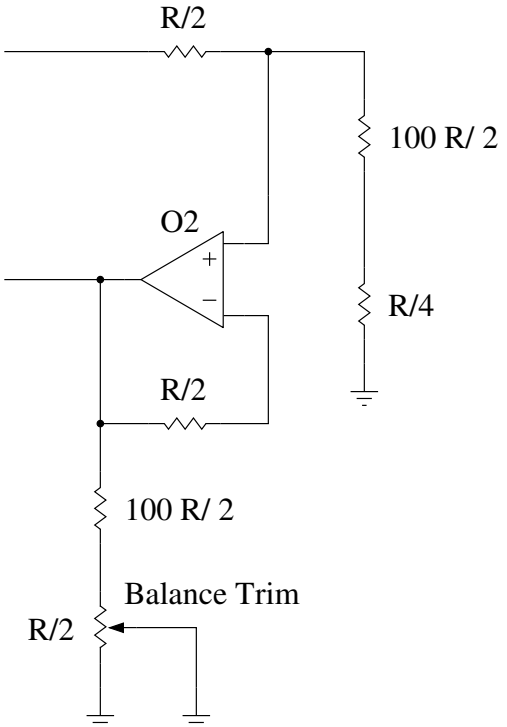

Optional Balance Configuration